VERSATILE TEST REACTOR

Experimental Capabilities: Driving Nuclear Innovation

VTR SYNERGY

The United States has long been a leader in the development of nuclear technologies. However, the U.S. lacks a fast neutron testing capability to support advanced nuclear technology, thereby placing the U.S. industry in a position to rely on foreign services to support advanced reactor research and development. The Versatile Test Reactor (VTR) is intended to fill this long-standing gap, leveraging previous and existing U.S. government and industry investments in nuclear reactors to accelerate the design and construction process, using proven nuclear reactor technology to create a world-class test facility.

WHAT EXPERIMENTAL CAPABILITIES WILL THE VTR PROVIDE?

The VTR provides a platform to accelerate nuclear technology development for today's light water reactors and tomorrow's advanced reactors by conducting research in several key areas:

- Molten Salt Reactors
- Gas-cooled Fast Reactors
- Lead-cooled Fast Reactors
- Sodium-cooled Fast Reactors
- Structural Materials Testing
- Rabbit Systems (for rapid specimen/test insertion and retrieval)
- Digital Engineering & Virtual Design and Construction
- Instrumentation & Controls

WHAT ARE THE VTR TEST VEHICLES?

There will be four test vehicle categories for inserting experiments into the VTR:

- Dismountable Test Assembly (DTA): A modified driver fuel assembly that will have an insert that replaces the middle 7-19 pins of the driver fuel, which can contain fuel or material tests. The DTA insert can remain for one cycle, or for as many cycles as the material limits of the insert allow. The DTA insert will be removable and a new insert can be loaded (during any outage).
- Normal Test Assembly (NTA): These are the standard non-instrumented open test assemblies that are the same size, flat-to-flat, as the driver fuel assemblies. These experiments are fuels or materials.
- Extended Length Test Assembly (ELTA): These are test assemblies that contain various sensors and instruments capable of manipulating the test environment (temperature, flow, etc.) during the test, and may contain a coolant system segregated from the reactor/primary sodium coolant. All ELTA's extend through the reactor head, and can contain fuels or materials.
- Rabbit Test Assembly (RTA), or rapid shuttle system for short term irradiations: ideal for irradiating samples for short periods of time and extracting them quickly.

VTR test vehicles will have large irradiation test volumes—more than 7 liters per vehicle—that will be available to all users. The VTR will be able to accommodate up to five NTA's, four ELTA's, and one RTA described above. Many more test positions will be available for DTA's.

HOW DOES THE VTR WORK WITH PARTNERS TO ADVANCE EXPERIMENT CAPABILITIES?

Eighteen universities, nine private entities/industry partners and six national laboratories are collaborating within each of the test vehicle categories and key areas.

The objective is to cover the wide range of potential experiment designs that meet the needs of relevant stakeholders and potential users.

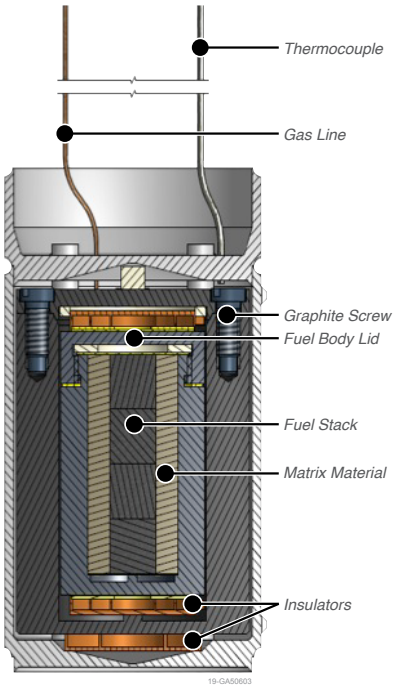

A typical example of a test vehicle

The VTR is already helping to address challenges faced by reactor innovators today through development of innovative sensors and monitoring systems, digital engineering approaches, enhanced modeling, and new measurement techniques.

HOW WILL RESEARCHERS BE ABLE TO ACCESS VTR CAPABILITIES?

In general, the VTR will operate as a national user facility. Users will be provided access to the VTR, technical expertise from experienced scientists and engineers, and assistance with experiment design, assembly, safety analysis and examination. Access to user facilities is typically provided through open and competitive review processes. The Nuclear Science User Facility (NSUF) will be used as the model for scientific experiments. However, not all proposed experiments will be subject to a peer reviewed competitive process.

Experiments important to national programs and important to addressing emerging needs in the nuclear industry will receive a higher priority. International experiments covered under international collaboration agreements will also be a priority.

Other users will be accommodated with full cost-recovery based on availability of experimental positions.

University Partners

Abilene Christian University
Fort Lewis College
Georgia Tech
Idaho State University
Illinois Institute of Technology
Massachusetts Institute of Technology
North Carolina State University
Oregon State University
Purdue University
Texas A&M University
University of California, Berkeley
University of Idaho
University of Michigan
University of New Mexico
University of Pittsburgh
University of Utah
University of Wisconsin-Madison
Virginia Commonwealth University

National Laboratory Partners

Argonne National Laboratory
Idaho National Laboratory
Los Alamos National Laboratory
Oak Ridge National Laboratory
Pacific Northwest National Laboratory
Savannah River National Laboratory

Industry Partners

The Cameron Group
Cosylab
EPRI
Framatome
GE-Hitachi/Bechtel
General Atomics
Orano
TerraPower
Westinghouse

U.S. Department of Energy

MEDIA CONTACT

Kortny Rolston-Duce
VTR Communications Director
kortny.rolston-duce@inl.gov

TECHNICAL CONTACT

Kevan Weaver
VTR Experiments Technical Integration Principal
Kevan.Weaver@inl.gov

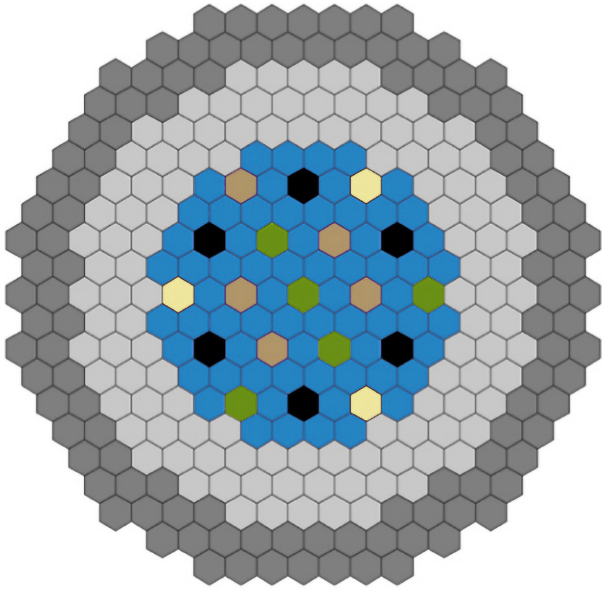

VTR Core Map

- *Driver fuel rods (66) and/or DTAs (Dismountable Test Assembly)*
- *Control rod (6)*
- *Safety rod (3)*
- *ELTAs (Extended Length Test Assemblies) and/or RTA (Rabbit Test Assembly) locations*
- *NTA (Normal Test Assembly) and/or DTA (Dismountable Test Assembly) locations*
- *Reflector*
- *Shield*

VTR VERSATILE TEST REACTOR

19-50625_R10